FITZGERALD FORMLINERS

Forming The Future ™

PATTERN 17959A
Los Amigos Wave

Geometric
Part Size: 99.5" W x 36.75" H
Max Depth: 0.884"

Vac-U-Form™

Styrene - Single Use.
ABS Plastic - Up to 15 reuses.

PANEL A

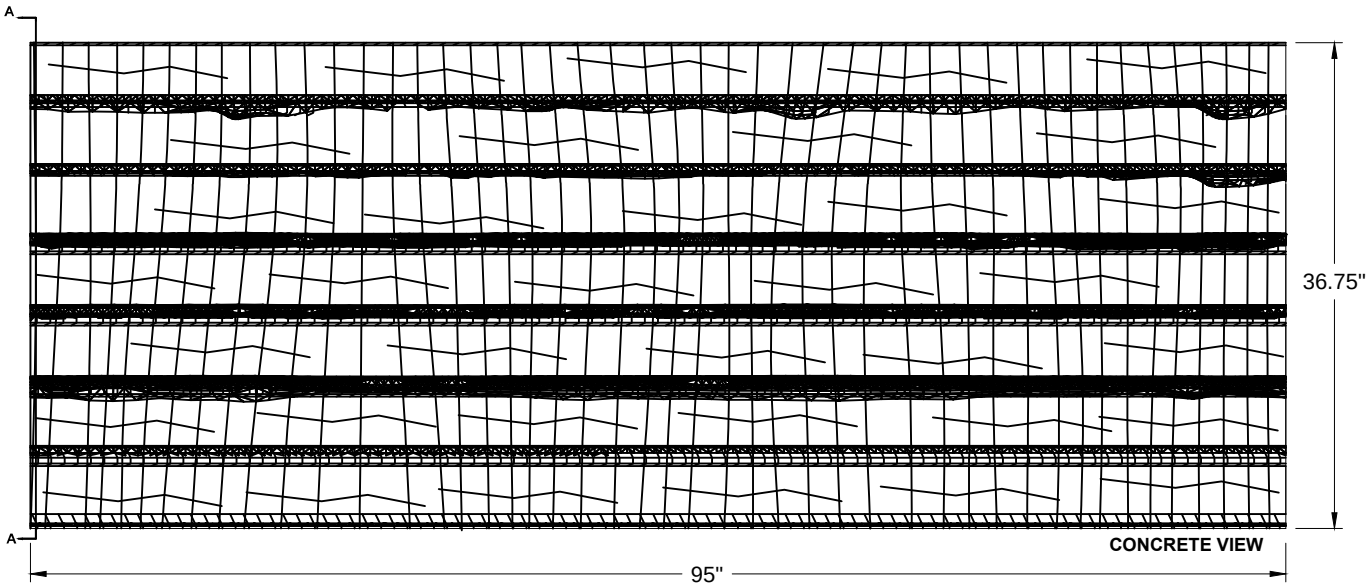

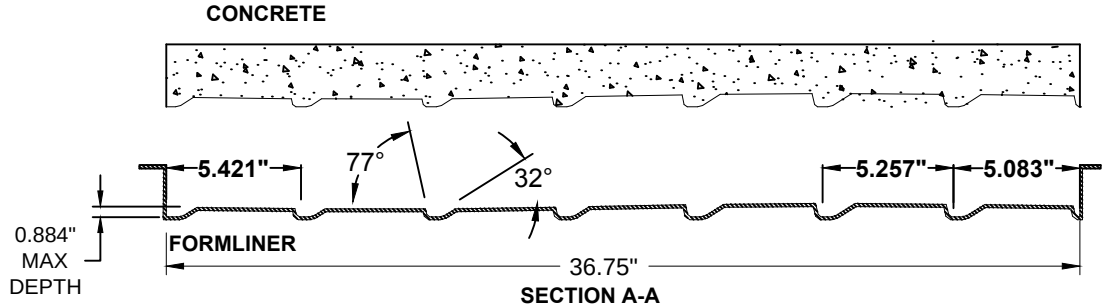

SECTION A-A

FORMLINER DETAIL

This document contains confidential and proprietary information of Fitzgerald Formliners, Inc. and is protected by copyright, trade secret, and other state and federal laws. Its receipt or possession does not cover any rights to reproduce, disclose it's contents, or to manufacture, use, or sell anything it may describe. Reproduction, disclosure, or use without specific written authorization of Fitzgerald Formliners, Inc. is strictly forbidden.

FITZGERALD FORMLINERS
1500 East Chestnut Avenue ● Santa Ana, CA 92701 ● Fax (714) 245-9715
Ph: (800) 547-7760 ● Ph (714) 547-6710 ● www.formliners.com

Pattern can be requested in AutoCad format.

FITZGERALD FORMLINERS

Forming The Future ™

PATTERN 17959B
Los Amigos Wave

Geometric
Part Size: 99.5" W x 42" H
Max Depth: 0.994"

Vac-U-Form™

Styrene - Single Use.
ABS Plastic - Up to 15 reuses.

PANEL B

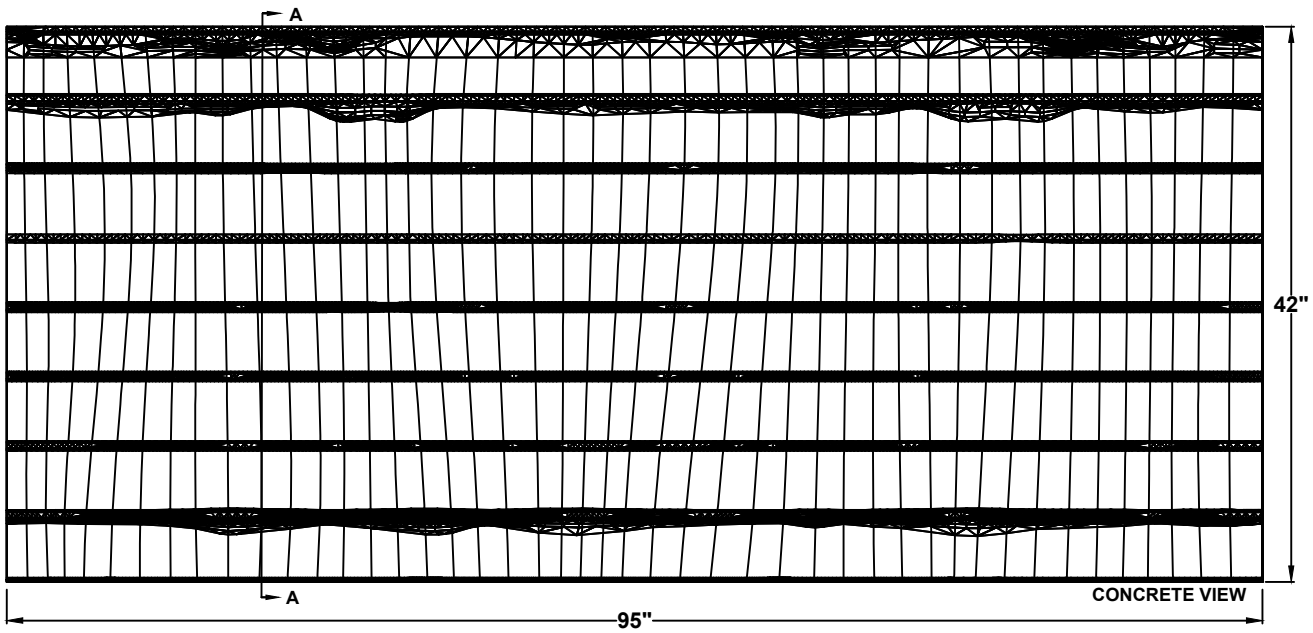

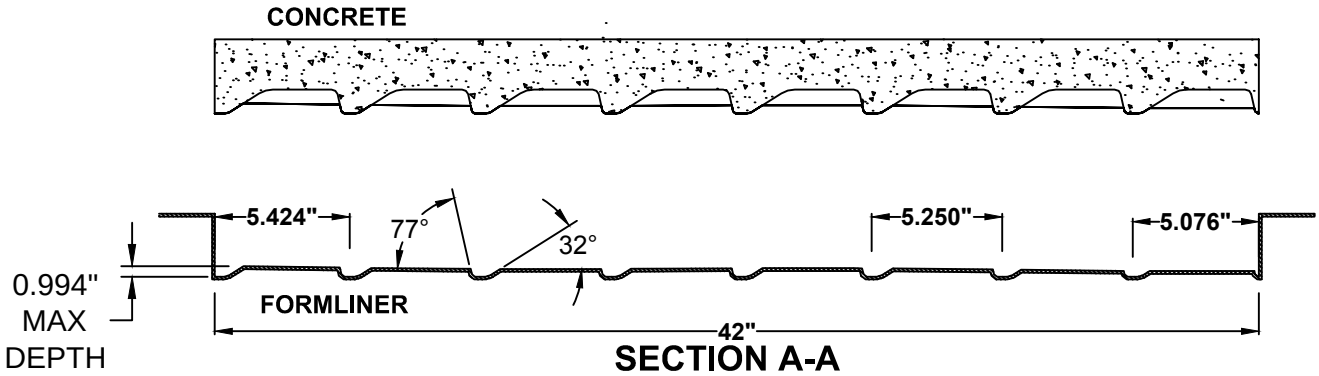

SECTION A-A

FORMLINER DETAIL

This document contains confidential and proprietary information of Fitzgerald Formliners, Inc. and is protected by copyright, trade secret, and other state and federal laws. Its receipt or possession does not cover any rights to reproduce, disclose it's contents, or to manufacture, use, or sell anything it may describe. Reproduction, disclosure, or use without specific written authorization of Fitzgerald Formliners, Inc. is strictly forbidden.

FITZGERALD FORMLINERS
1500 East Chestnut Avenue • Santa Ana, CA 92701 • Fax (714) 245-9715
Ph: (800) 547-7760 • Ph (714) 547-6710 • www.formliners.com

Pattern can be requested in AutoCad format.

FITZGERALD FORMLINERS

Forming The Future ™

PATTERN 17959C
Los Amigos Wave

Geometric
Part Size: 99.5" W x 42" H
Max Depth: 0.96"

Vac-U-Form™

Styrene - Single Use.
ABS Plastic - Up to 15 reuses.

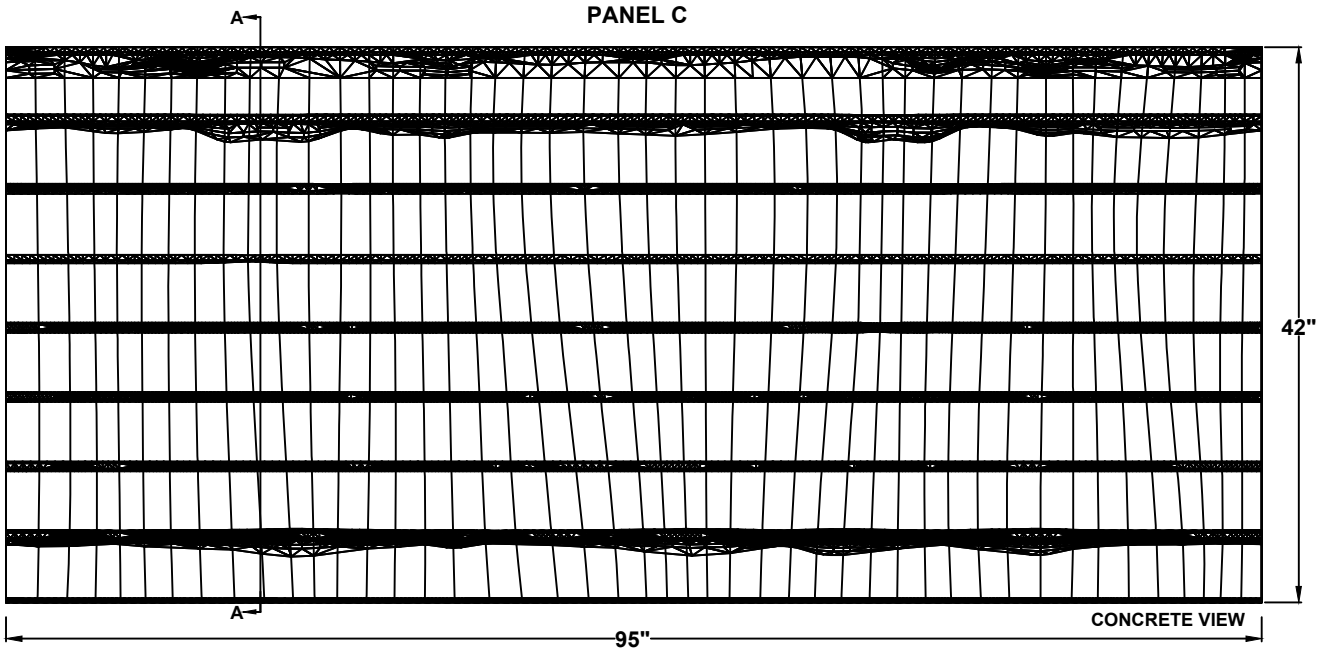

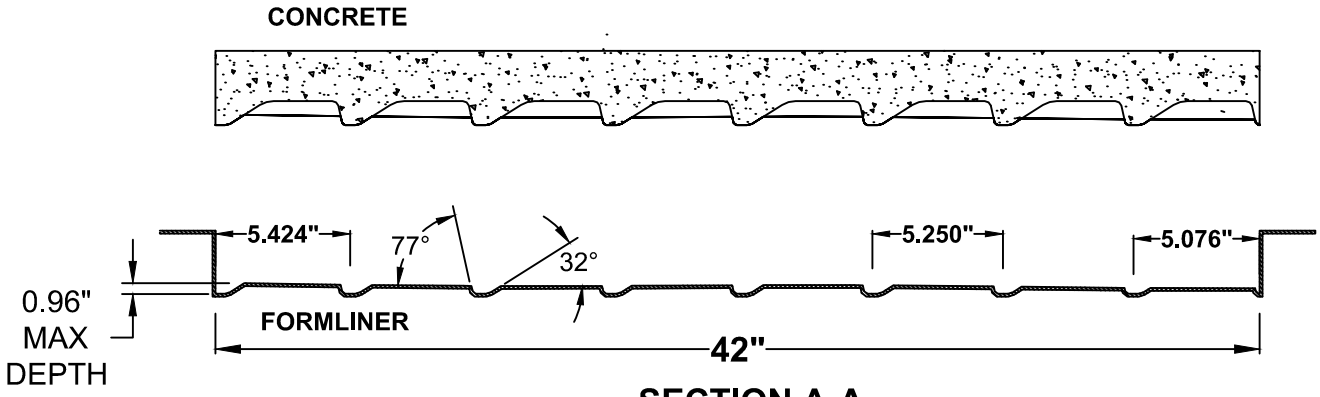

SECTION A-A

FORMLINER DETAIL

This document contains confidential and proprietary information of Fitzgerald Formliners, Inc. and is protected by copyright, trade secret, and other state and federal laws. Its receipt or possession does not cover any rights to reproduce, disclose it's contents, or to manufacture, use, or sell anything it may describe. Reproduction, disclosure, or use without specific written authorization of Fitzgerald Formliners, Inc. is strictly forbidden.

FITZGERALD FORMLINERS
1500 East Chestnut Avenue • Santa Ana, CA 92701 • Fax (714) 245-9715
Ph: (800) 547-7760 • Ph (714) 547-6710 • www.formliners.com

Pattern can be requested in AutoCad format.

FITZGERALD FORMLINERS

Forming The Future ™

PATTERN 17959D
Los Amigos Wave

Geometric
Part Size: 99.5" W x 42" H
Max Depth: 1.137"

Vac-U-Form™

Styrene - Single Use.
ABS Plastic - Up to 15 reuses.

PANEL D

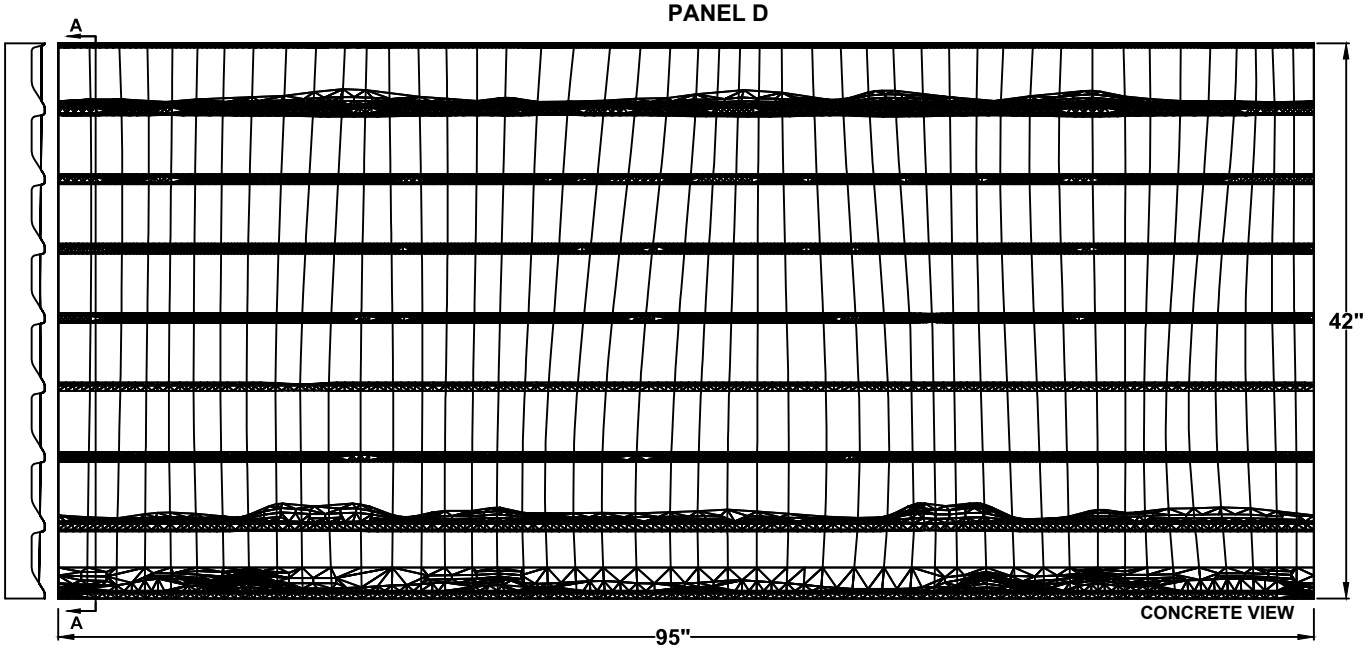

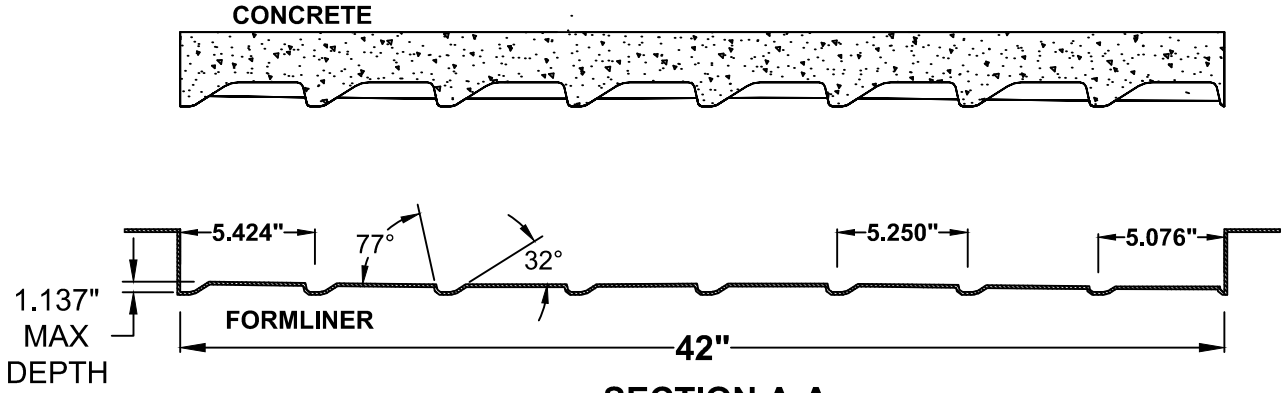

SECTION A-A

FORMLINER DETAIL

This document contains confidential and proprietary information of Fitzgerald Formliners, Inc. and is protected by copyright, trade secret, and other state and federal laws. Its receipt or possession does not cover any rights to reproduce, disclose it's contents, or to manufacture, use, or sell anything it may describe. Reproduction, disclosure, or use without specific written authorization of Fitzgerald Formliners, Inc. is strictly forbidden.

FITZGERALD FORMLINERS
1500 East Chestnut Avenue • Santa Ana, CA 92701 • Fax (714) 245-9715
Ph: (800) 547-7760 • Ph (714) 547-6710 • www.formliners.com

Pattern can be requested in AutoCad format.

FITZGERALD FORMLINERS

Forming The Future ™

PATTERN 17959
Los Amigos Wave

Geometric

Vac-U-Form™

Styrene - Single Use.
ABS Plastic - Up to 15 reuses.

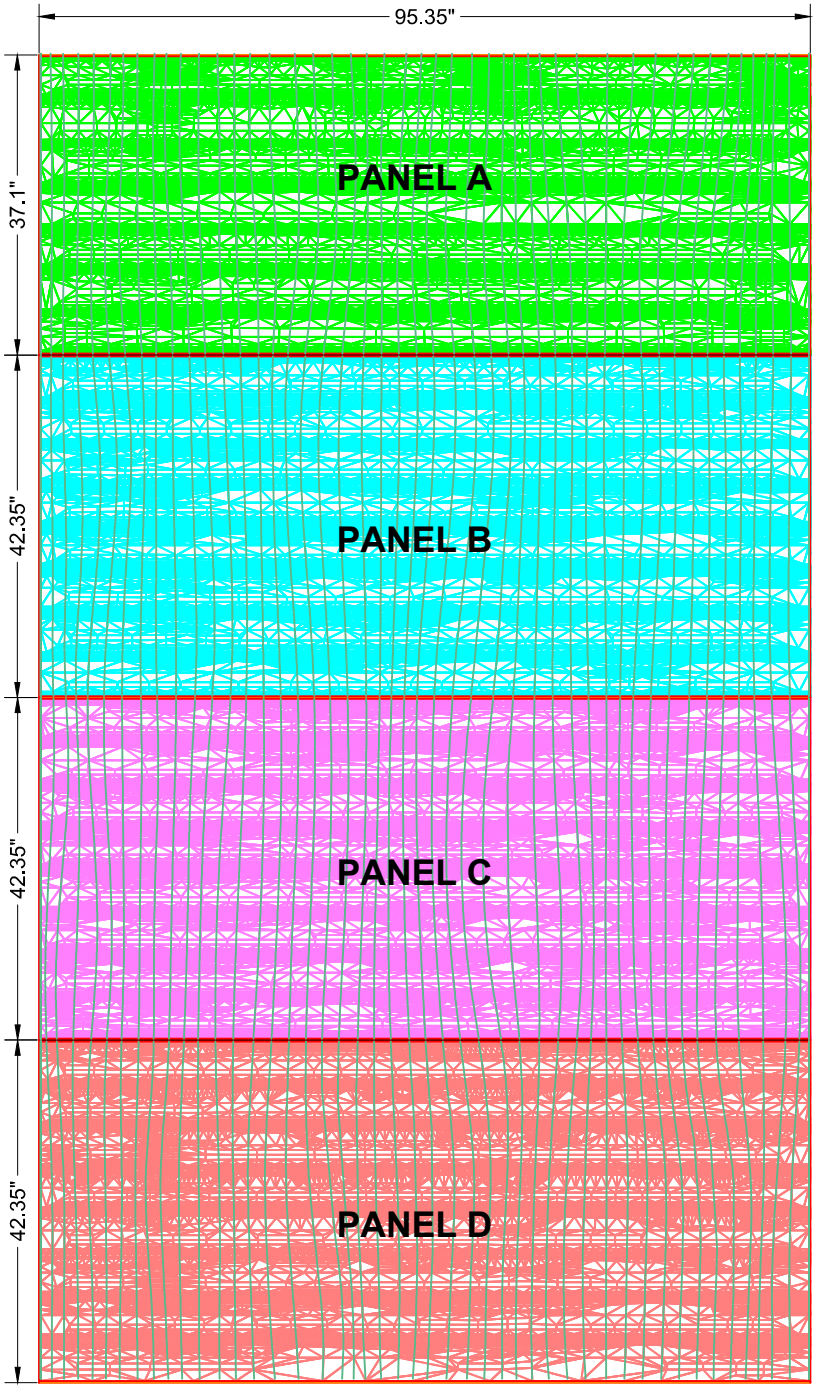

This document contains confidential and proprietary information of Fitzgerald Formliners, Inc. and is protected by copyright, trade secret, and other state and federal laws. Its receipt or possession does not cover any rights to reproduce, disclose it's contents, or to manufacture, use, or sell anything it may describe. Reproduction, disclosure, or use without specific written authorization of Fitzgerald Formliners, Inc. is strictly forbidden.

FITZGERALD FORMLINERS
1500 East Chestnut Avenue • Santa Ana, CA 92701 • Fax (714) 245-9715
Ph: (800) 547-7760 • Ph (714) 547-6710 • www.formliners.com

Pattern can be requested in AutoCad format.